Houtbouw in ontwikkeling

Nieuwe regelgeving voor moderne houtbouw

ir. Rob Verhaegh RC
Adviesbureau Lüning
5-11-2026

Introductie

ir. Rob Verhaegh RC

Adviseur Houtconstructies

- **2002 – 2010:** **TU Eindhoven** - *Master Structural Design*
- **2008 – 2010:** **Royal Haskoning** - *junior constructeur*
- **2011 – 2022:** **Arup** – (*senior) constructeur*
  - *Haut*
  - *DPG Media*
  - *Dutch Mountains*
- **2022 – heden:** **Adviesbureau Lüning** – *adviseur en teamleider*
  - *DV&O Zaanstad*
  - *Hyde Park Mayfair*
  - *Oostpoort Haarlem*
  - *Amstelwood*
- **2021 – 2025:** PAO Cursus Moderne Houtconstructies – cursusleider
- **2024 – heden:** HTI cursus ‘Houtbouw voor constructeurs’ - docent



LÜNING

Introdutctie

Adviesbureau Lüning

Opgericht 1983 door Emil Lüning
alleen projecten met hout

Sinds 2015 deel van Oosterhoff

20 medewerkers in Velp en Delft

Ontwerpers met Detailkennis



LÜNING




HAUT
Pionier van de nieuwe houten eeuw
In 2016 wonnen Lingotto, Arup en Team V Architectuur de gemeentelijke prijsvraag voor het meest duurzame woongebouw van Amsterdam.
Samen met bouwbedrijf J.P. van Eesteren is HAUT waargemaakt: aan de Amstel staat nu een duurzaam gebouw van twintig verdiepingen hoog met ruim 2.800 m³ houten wanden en vloeren, slimme duurzame installaties en een enorme besparing op de gebruikelijke CO_2 uitstoot van het bouwproces. Dit is bekroond met een uniek BREEAM Outstanding certificaat.
HAUT is de aanjager voor de nieuwe houten eeuw en een voorbeeld voor vele anderen in de bouwsector.
Bouwen in hout heeft toekomst.
Die toekomst begint hier.
lingotto
TEAM V
ARUP
jp van eesteren | TBI

Introdutctie





Introductie





Introductie



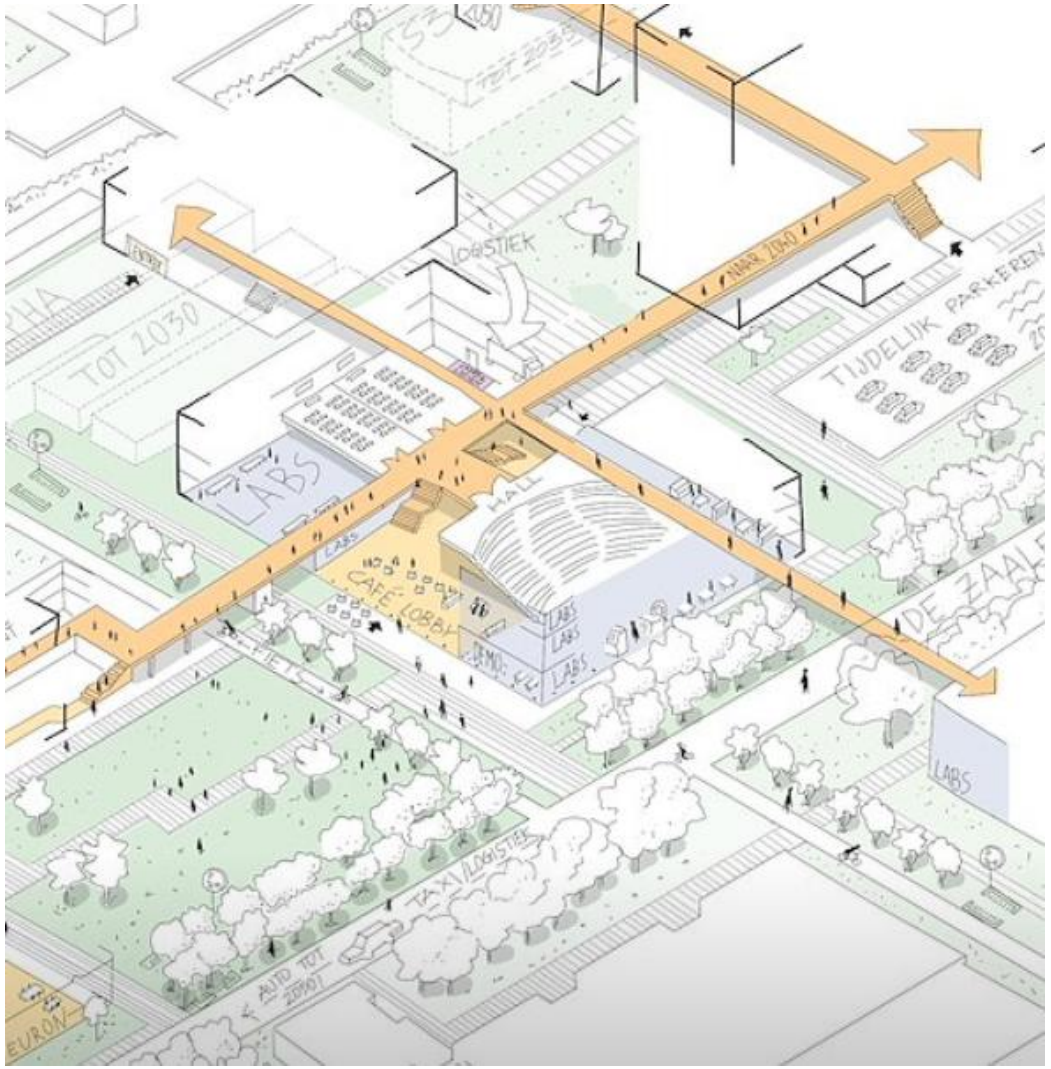

Moderne houtbouw in Nederland: stand van zaken

60% van alle materialen wordt gebruikt in de bouw

60% materialen in de bouw zit in de hoofddraagconstructie

Waarom hout?

LÜNING

Biogene CO_2 Opslag

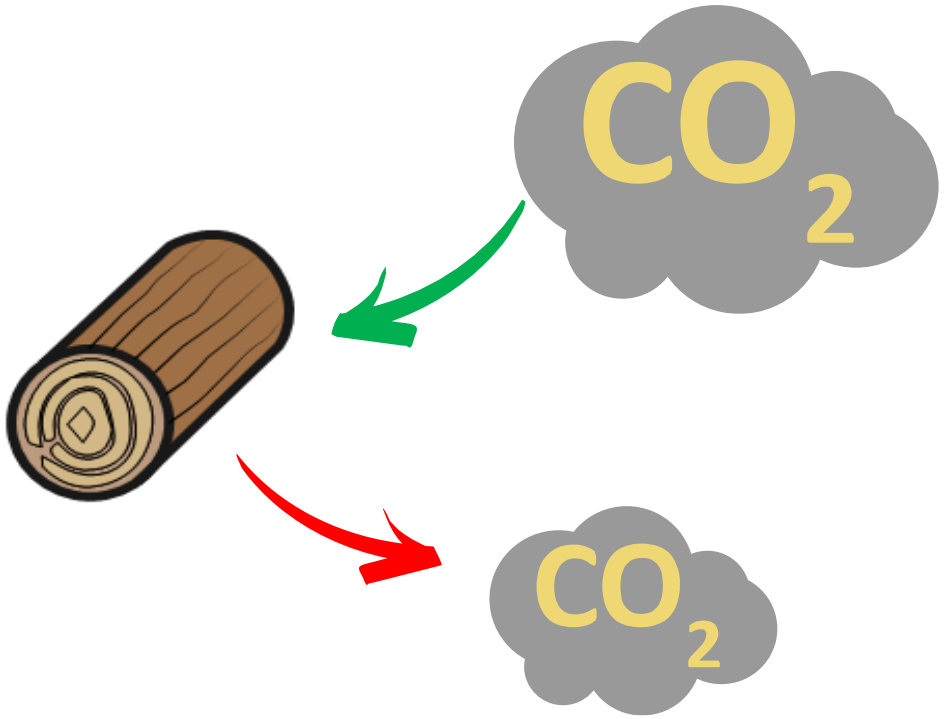

Materiaalgebonden
CO_2 Uitstoot

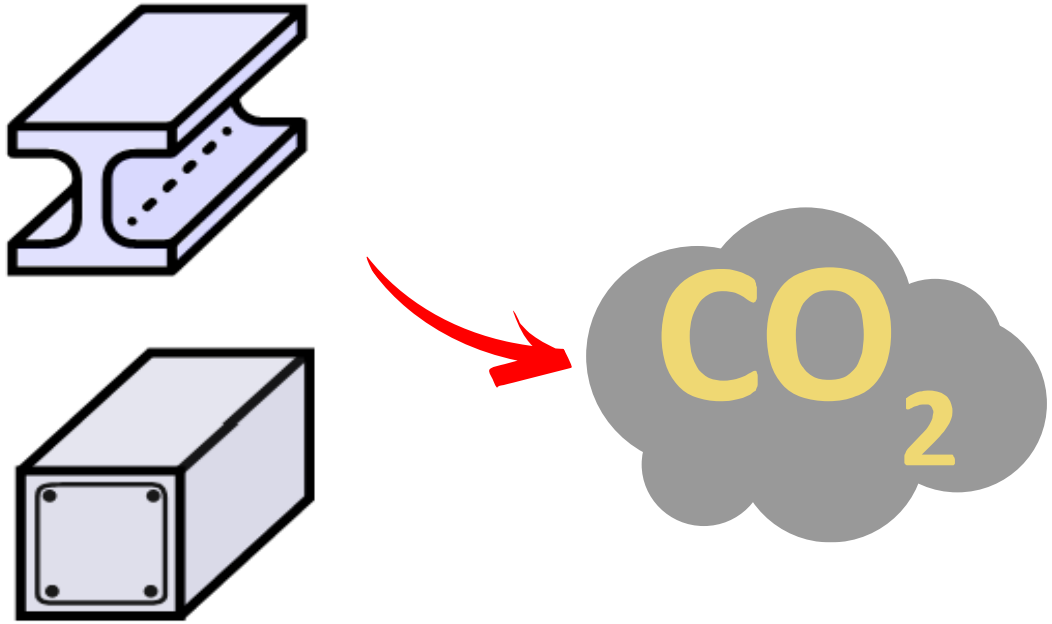

Materiaalgebonden
CO_2 Uitstoot

Waarom hout?

LÜNING

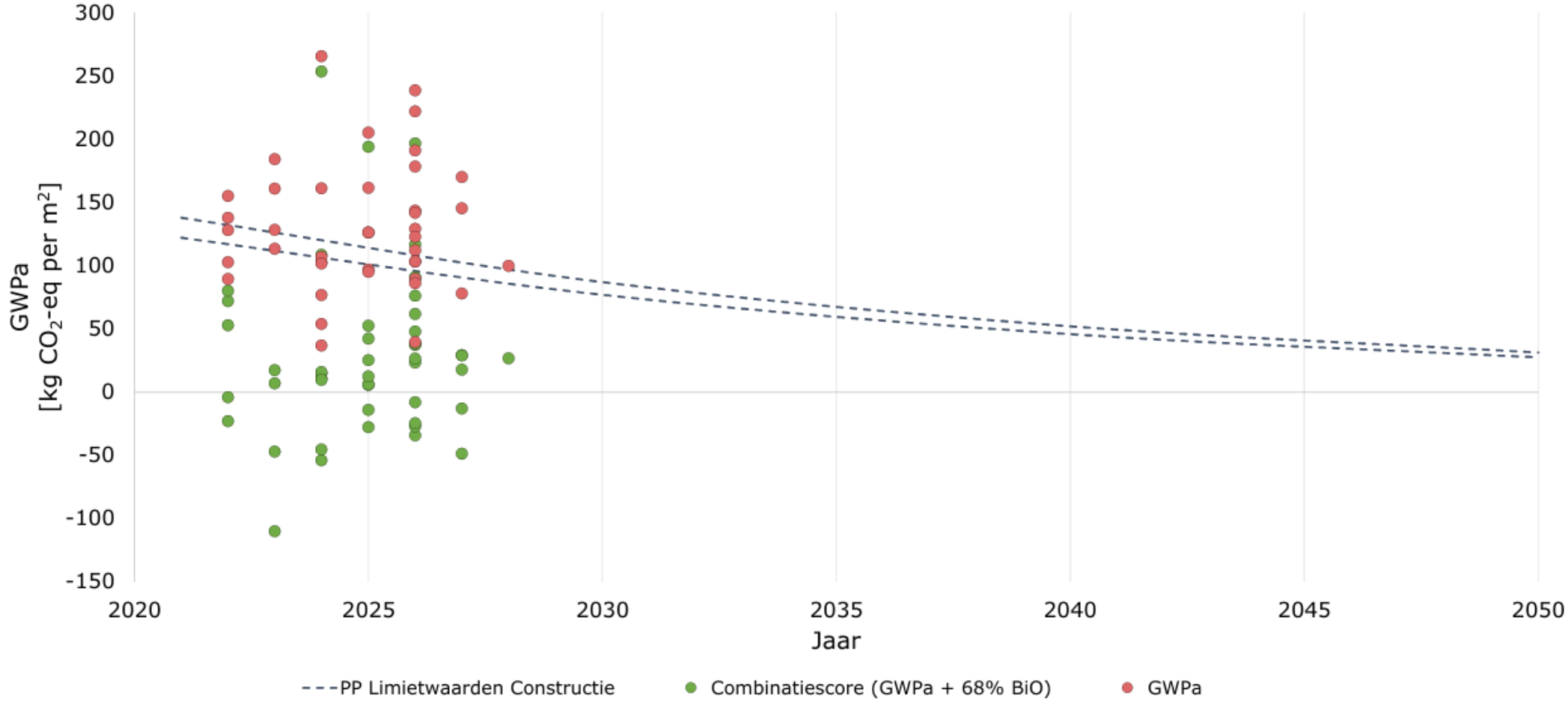

Grafiek Materiaalgebonden emissies (GWPa) + combinatiescore (GWPa + 68% BiO) alle berekende projecten

Waarom hout?

- Gezondheid
- Bouwsnelheid
- Esthetiek
- Commerciële waarde
- Stikstof (elektrisch materieel)
- Transport
- …

LÜNING

Houtbouw in Nederland



Biofilische school De Verwondering Almere



Timberhouse Enschede



Hotel Jakarta Amsterdam



Triodos Bank Zeist



Sawa Rotterdam



DPG Mediavaert Amsterdam

LÜNING

deVolkskrant

Vandaag | Midterms VS | Oekraïne | AI-revolutie | Cultuur & Media | Volkskrant Magazine | Series | Beter Leven | Sport | Podcasts | Puzzels

V+ ARCHITECTUUR

Zet de houtbouwrevolutie – waarover al jaren wordt gesproken – nu eindelijk door?



3-9-2025

1. Hout in de ‘main stream’

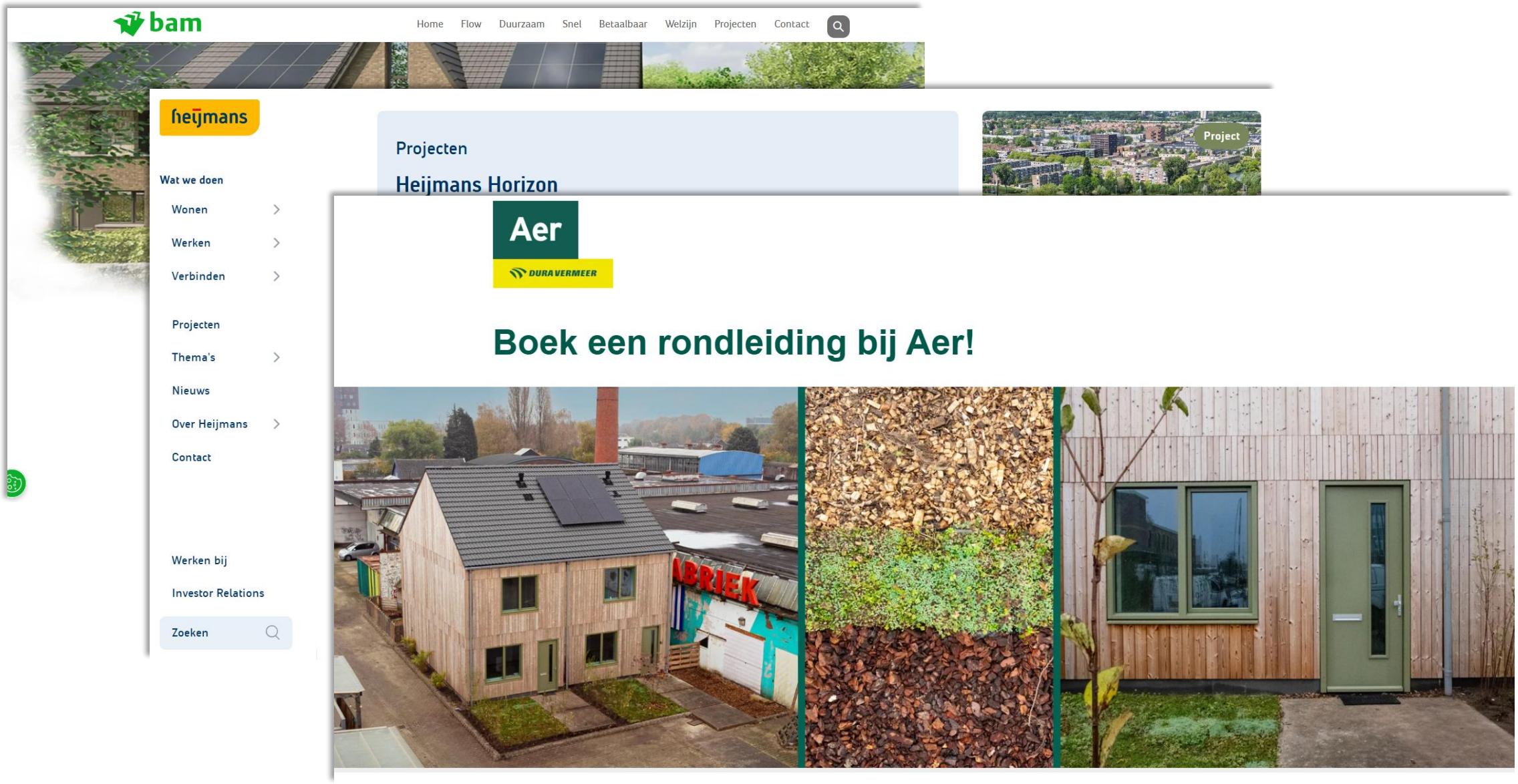

2. Bredere toepassing



Bestsellers Lelystad (bron: Wiehag)

25.600 m3 hout

2. Bredere toepassing





Bestsellers Lelystad (bron: Wiehag)

2. Bredere toepassing





Plus Ultra III Wageningen

2. Bredere toepassing





Passerelle Zwolle

3. Groei en consolidatie van collectieve kennis en ervaring

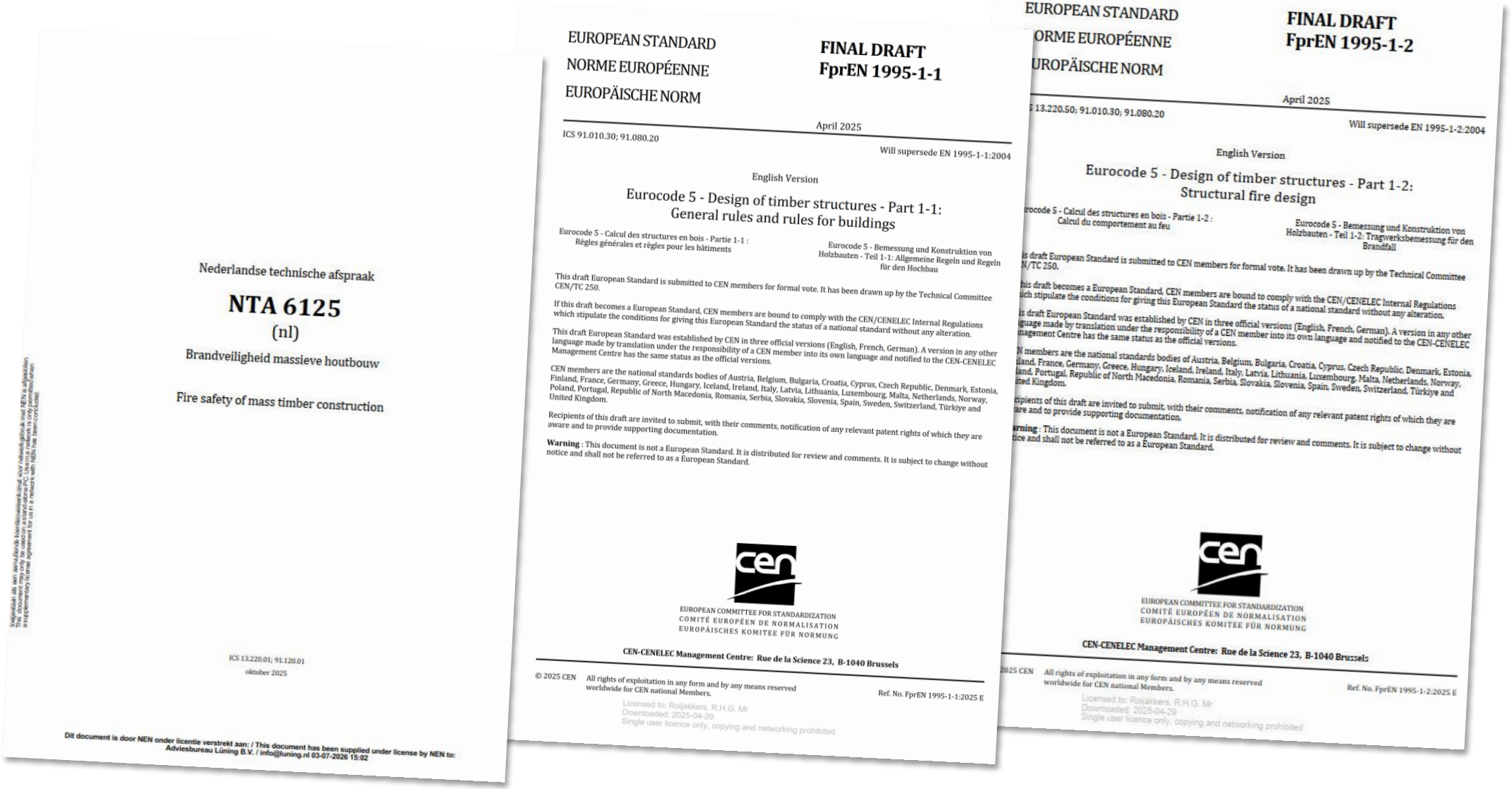

Nederlandse technische afspraak

NTA 6125

(nl)

Brandveiligheid massieve houtbouw

Fire safety of mass timber construction

ICS 13.220.01; 91.120.01

oktober 2025

Dit document is door NEN onder licentie verstrekt aan: / This document has been supplied under license by NEN to: Adviesbureau Lüning B.V. / info@luning.nl 03-07-2026 15:02

EUROPEAN STANDARD
NORME EUROPÉENNE
EUROPÄISCHE NORM

FINAL DRAFT
FprEN 1995-1-1

April 2025

ICS 91.010.30; 91.080.20

Will supersede EN 1995-1-1:2004

English Version

Eurocode 5 - Design of timber structures - Part 1-1: General rules and rules for buildings

Eurocode 5 - Calcul des structures en bois - Partie 1-1 : Règles générales et règles pour les bâtiments

Eurocode 5 - Bemessung und Konstruktion von Holzbauten - Teil 1-1: Allgemeine Regeln und Regeln für den Hochbau

This draft European Standard is submitted to CEN members for formal vote. It has been drawn up by the Technical Committee CEN/TC 250.

If this draft becomes a European Standard, CEN members are bound to comply with the CEN/CENELEC Internal Regulations which stipulate the conditions for giving this European Standard the status of a national standard without any alteration.

This draft European Standard was established by CEN in three official versions (English, French, German). A version in any other language made by translation under the responsibility of a CEN member into its own language and notified to the CEN-CENELEC Management Centre has the same status as the official versions.

CEN members are the national standards bodies of Austria, Belgium, Bulgaria, Croatia, Cyprus, Czech Republic, Denmark, Estonia, Finland, France, Germany, Greece, Hungary, Iceland, Ireland, Italy, Latvia, Lithuania, Luxembourg, Malta, Netherlands, Norway, Poland, Portugal, Republic of North Macedonia, Romania, Serbia, Slovakia, Slovenia, Spain, Sweden, Switzerland, Türkiye and United Kingdom.

Recipients of this draft are invited to submit, with their comments, notification of any relevant patent rights of which they are aware and to provide supporting documentation.

Warning : This document is not a European Standard. It is distributed for review and comments. It is subject to change without notice and shall not be referred to as a European Standard.

EUROPEAN COMMITTEE FOR STANDARDIZATION
COMITÉ EUROPÉEN DE NORMALISATION
EUROPÄISCHES KOMITEE FÜR NORMUNG

CEN-CENELEC Management Centre: Rue de la Science 23, B-1040 Brussels

© 2025 CEN All rights of exploitation in any form and by any means reserved worldwide for CEN national Members.

Ref. No. FprEN 1995-1-1:2025 E

Licensed to: Roijakkers, R.H.G. Mr
Downloaded: 2025-04-29
Single user licence only, copying and networking prohibited

EUROPEAN STANDARD
ORME EUROPÉENNE
UROPÄISCHE NORM

FINAL DRAFT
FprEN 1995-1-2

April 2025

13.220.50; 91.010.30; 91.080.20

Will supersede EN 1995-1-2:2004

English Version

Eurocode 5 - Design of timber structures - Part 1-2: Structural fire design

rocode 5 - Calcul des structures en bois - Partie 1-2 : Calcul du comportement au feu

Eurocode 5 - Bemessung und Konstruktion von Holzbauten - Teil 1-2: Tragwerksbemessung für den Brandfall

is draft European Standard is submitted to CEN members for formal vote. It has been drawn up by the Technical Committee N/TC 250.

his draft becomes a European Standard, CEN members are bound to comply with the CEN/CENELEC Internal Regulations ich stipulate the conditions for giving this European Standard the status of a national standard without any alteration.

is draft European Standard was established by CEN in three official versions (English, French, German). A version in any other guage made by translation under the responsibility of a CEN member into its own language and notified to the CEN-CENELEC nagement Centre has the same status as the official versions.

N members are the national standards bodies of Austria, Belgium, Bulgaria, Croatia, Cyprus, Czech Republic, Denmark, Estonia, land, France, Germany, Greece, Hungary, Iceland, Ireland, Italy, Latvia, Lithuania, Luxembourg, Malta, Netherlands, Norway, land, Portugal, Republic of North Macedonia, Romania, Serbia, Slovakia, Slovenia, Spain, Sweden, Switzerland, Türkiye and ited Kingdom.

cipients of this draft are invited to submit, with their comments, notification of any relevant patent rights of which they are are and to provide supporting documentation.

rning : This document is not a European Standard. It is distributed for review and comments. It is subject to change without tice and shall not be referred to as a European Standard.

EUROPEAN COMMITTEE FOR STANDARDIZATION
COMITÉ EUROPÉEN DE NORMALISATION
EUROPÄISCHES KOMITEE FÜR NORMUNG

CEN-CENELEC Management Centre: Rue de la Science 23, B-1040 Brussels

2025 CEN All rights of exploitation in any form and by any means reserved worldwide for CEN national Members.

Ref. No. FprEN 1995-1-2:2025 E

Licensed to: Roijakkers, R.H.G. Mr
Downloaded: 2025-04-29
Single user licence only, copying and networking prohibited

Tweede generatie Eurocode houtconstructies
NEN-EN 1995



Niet aangestuurd door BbL; wél gepubliceerd!

Dates of closure of Formal Vote

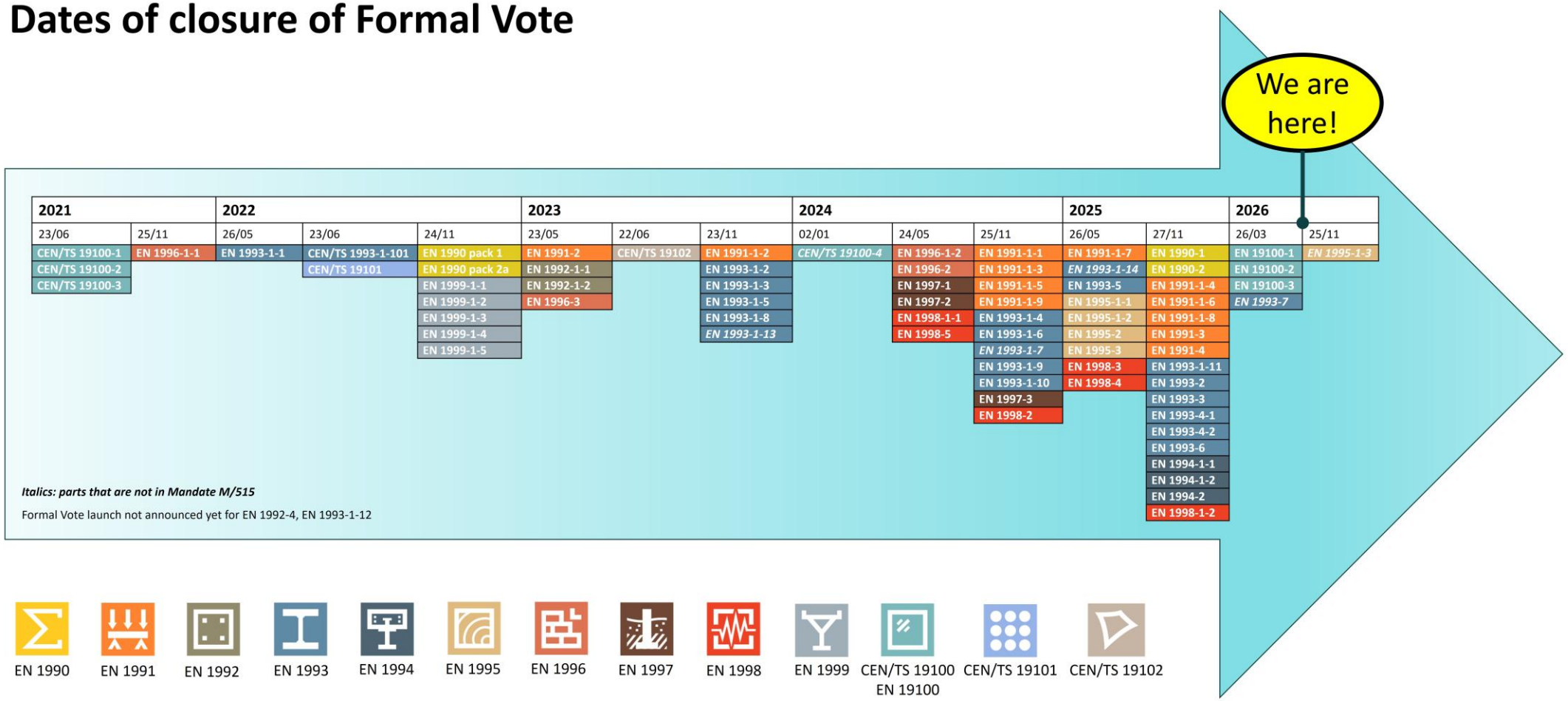

Dates of closure of Formal Vote

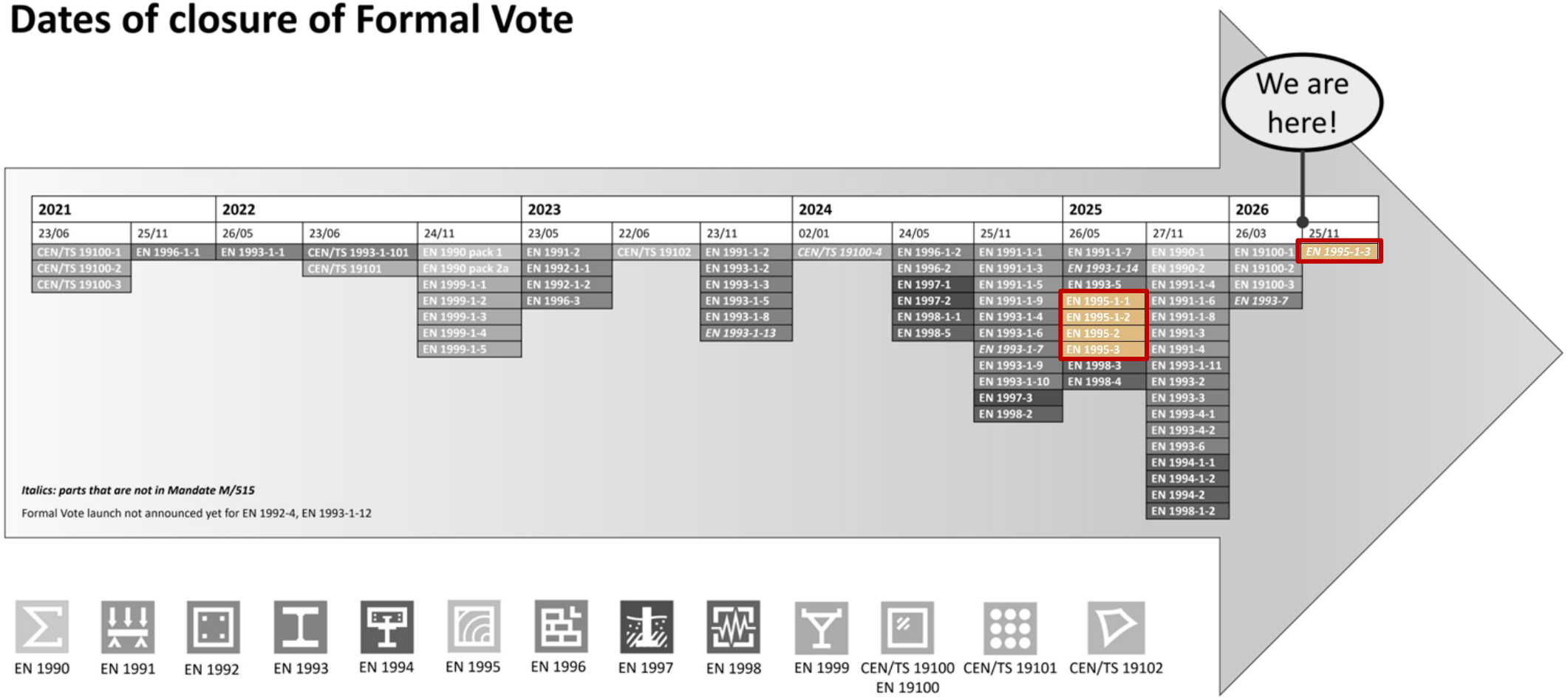

All second generation EN Eurocodes will have a **Date of publication (DoP)** of 30 September 2027. DoP is the **latest date by which an EN standard has to be implemented at national level** (by publication of an identical national standard or by endorsement)

All second generation EN Eurocodes will have a **Date of withdrawal (DoW)** of 30 March 2028. DoW is the **latest date by which national standards conflicting with the EN (i.e. in this case first generation Eurocode parts) have to be withdrawn**.

norm	aantal pagina's	
	2004	2025
NEN-EN 1995-1-1 Algemeen	123	445
NEN-EN 1995-1-2 Brand	70	180
NEN-EN 1995-2 Bruggen	29	85
NEN-EN 1995-3 Uitvoering	-	68
NVN-CEN/TS 19103:2021 TCC structures (wordt NEN-EN 1995-1-3)	-	58
	222	836

Evolutie

EN 1995-1-1:2004

1 General
e.g. Scope, Normative Refs., Assumptions, Terms and Definitions, Symbols
2 Basis of design
3 Material properties
4 Durability
5 Basis of structural analysis
6 Ultimate limit states
7 Serviceability limit states

8 Connections with metal fasteners
9 Components and assemblies

10 Structural detailing and control

FprEN 1995-1-1:2025

1 Scope
2 Normative References
3 Terms, definitions and symbols
4 Basis of design
5 Materials
6 Durability
7 Structural analysis
8 Ultimate limit states
9 Serviceability limit states
10 Fatigue
11 Connections
12 Diaphragms
13 Timber foundation piles

LÜNING

Evolutie

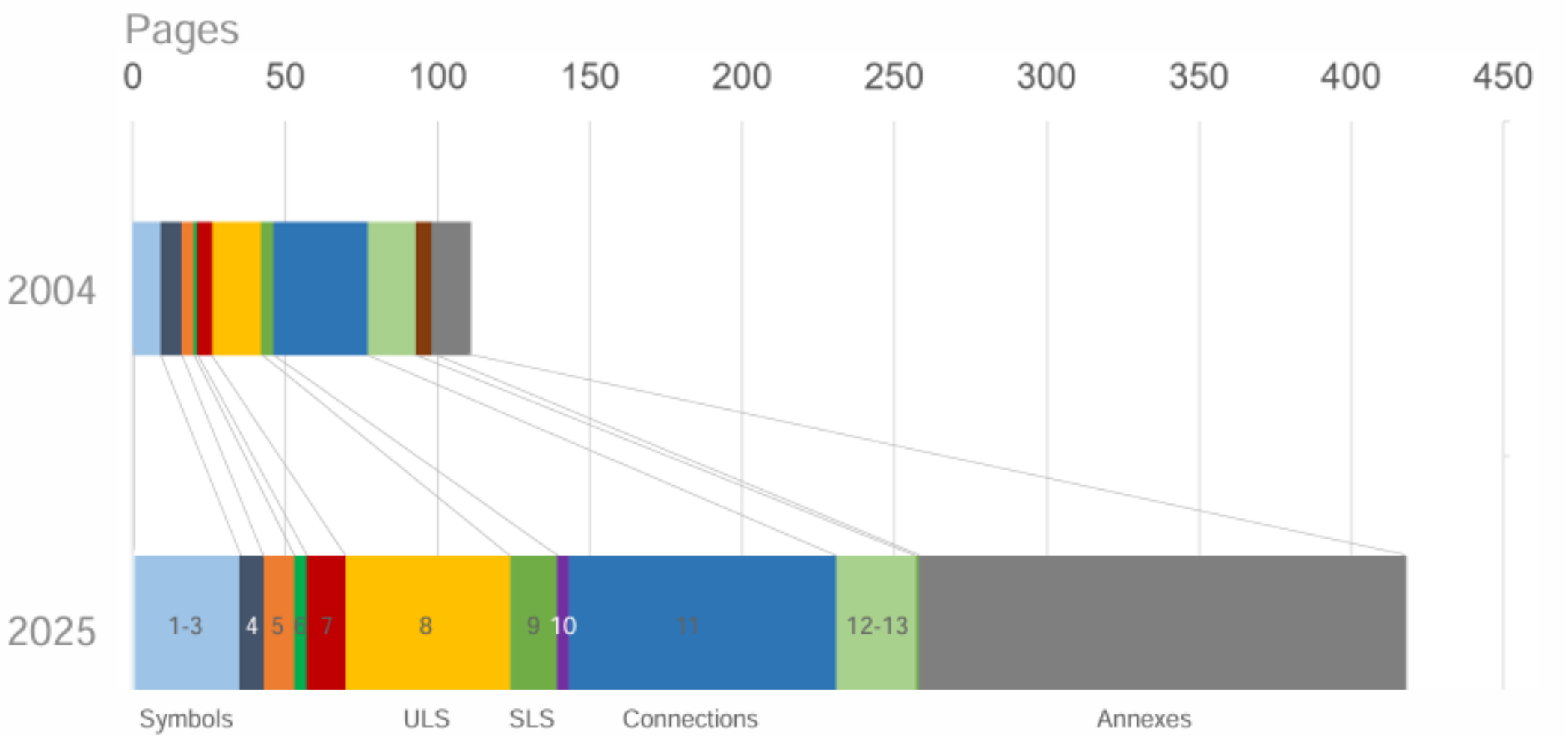

LÜNING

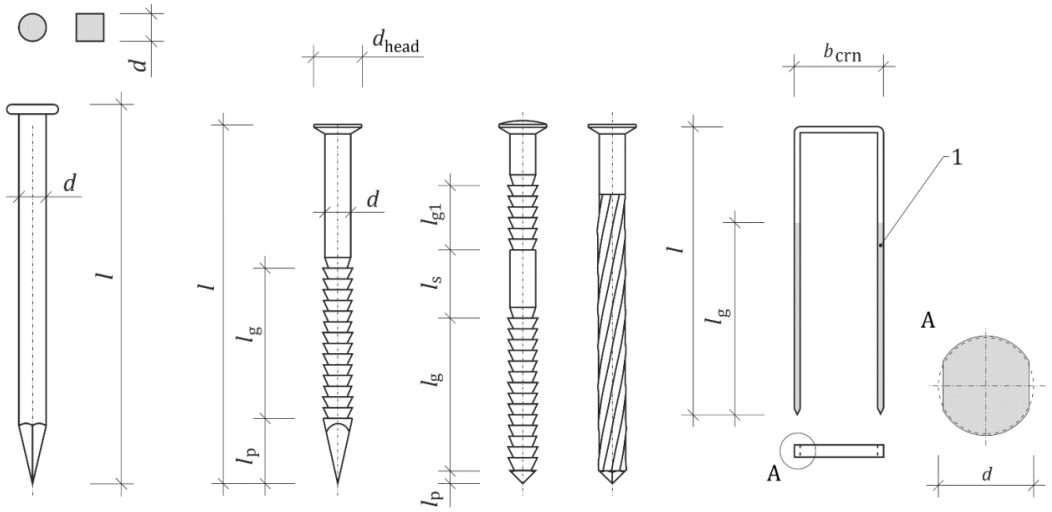

a) Smooth nail b) Profiled nails c) Staple

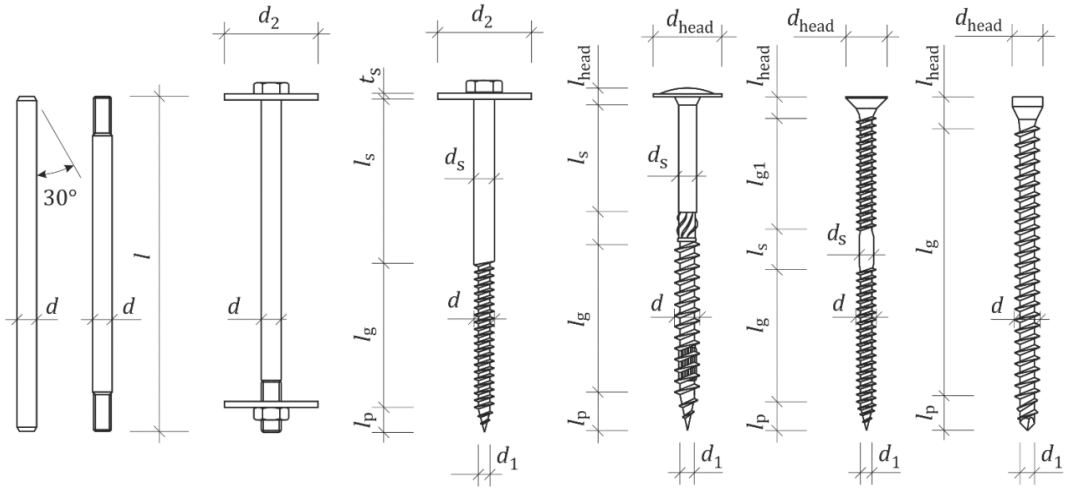

d) Dowel (with threaded ends) e) Bolt f) Coach screw with washer g) Screws with different threads, heads and points

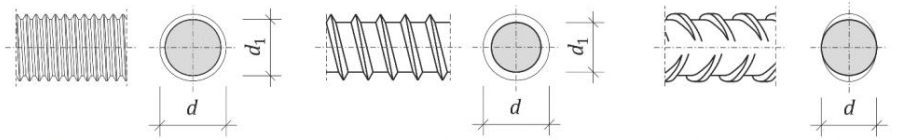

a) Bolts and rods with metric threads b) Rod with wood screw thread c) Ribbed rod or reinforcing steel bar

Key

d diameter d_1 inner thread diameter

Figure 11.3 — Geometry of rods

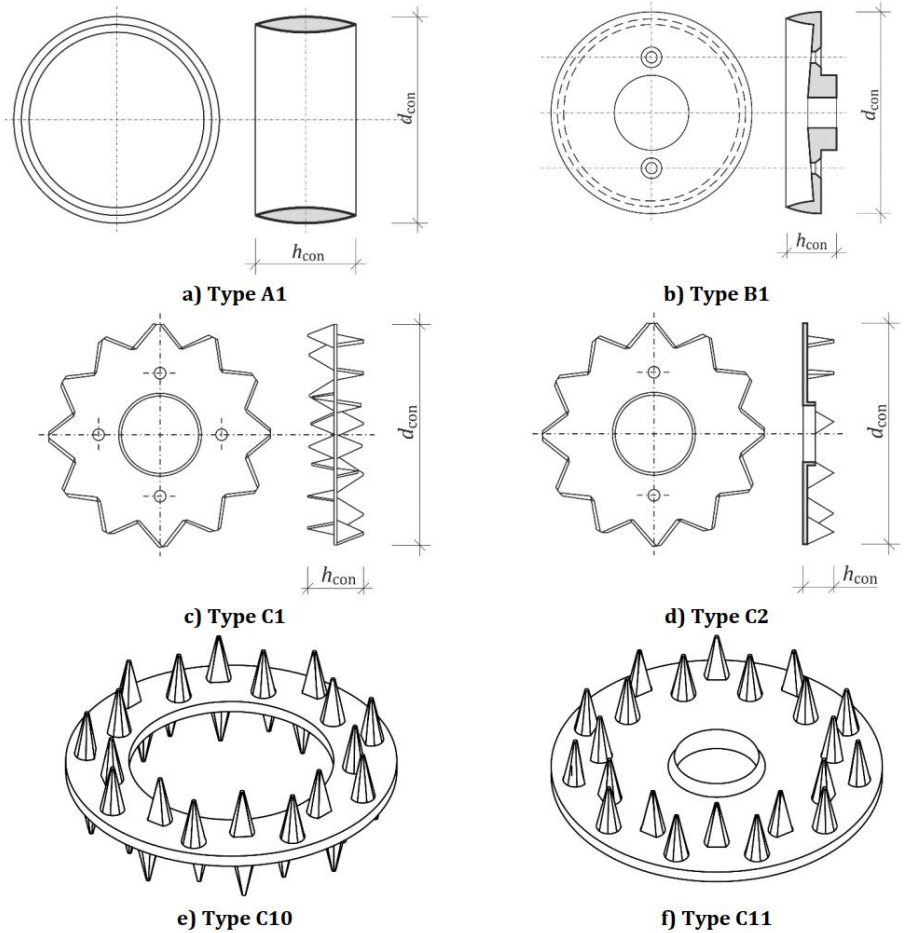

a) Type A1 b) Type B1 c) Type C1 d) Type C2 e) Type C10 f) Type C11

H11

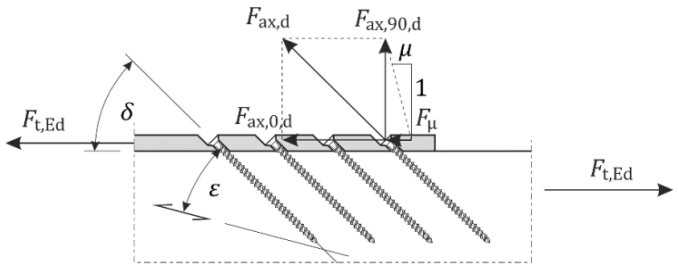

Afschuifverbinding met op trek belastte schuine schroeven

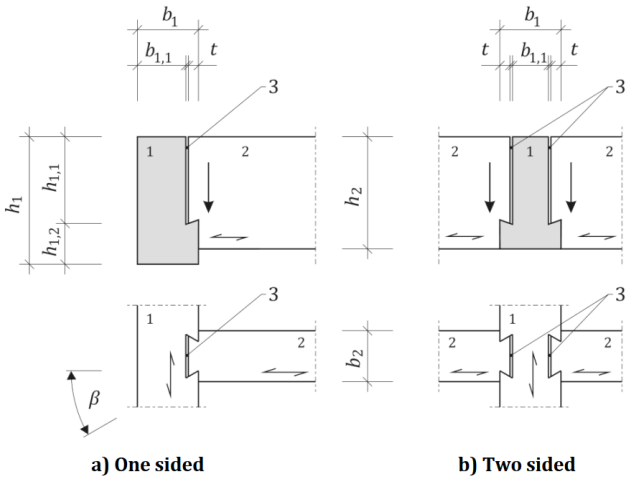

Zwaluwstaart verbindingen

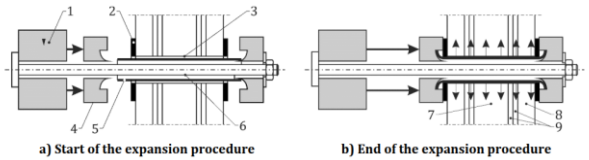

Buisverbinding (‘expanded tube fasteners’)

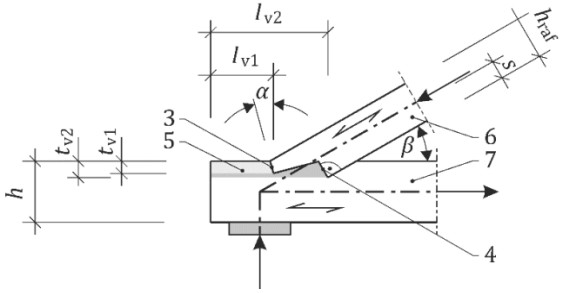

Ambachtelijke verbindingen

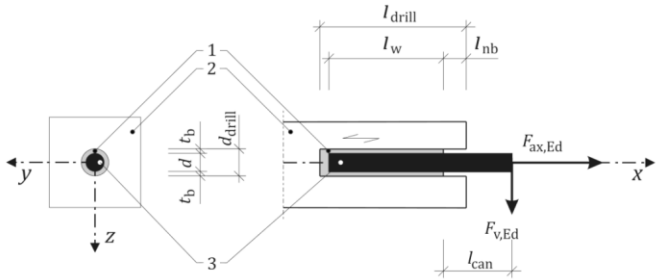

Ingelijmde draadeinden

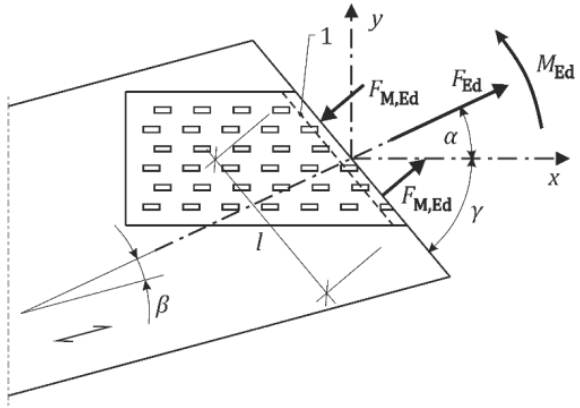

Nagelplaten

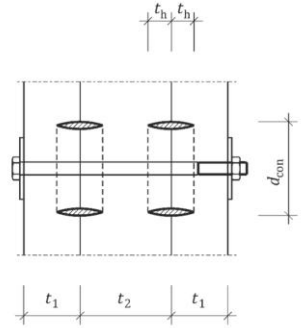

Kramplaten

Table 5.1 — Products and materials

Group / Subgroup / Product	Abbreviation	EN	EAD[a]
Solid wood-based	**SWB**		
Structural lumber	SL		
Structural timber	ST[b]	EN 14081-1	—
Structural finger jointed timber	FST	EN 15497	—
Parallel laminated timber	PL		
Glued solid timber	GST	EN 14080	—
Glued laminated timber	GL	EN 14080	EAD 130320
Block glued glulam	BGL	EN 14080	—
Single layered solid wood panel	SWP-P	EN 13986	—
Cross layered timber	CL		
Cross laminated timber	CLT	EN 16351	EAD 130005
Multi-layered solid wood panel	SWP-C	EN 13986	—
Veneer-based	**VB**		
Laminated veneer lumber	LVL		
LVL with parallel veneers	LVL-P	EN 14374	—
LVL with crossband veneers	LVL-C		
Glued laminated veneer lumber	GLVL		
GLVL with parallel veneers	GLVL-P	—	EAD 130010, EAD 130337
GLVL with crossband veneers	GLVL-C		
Plywood	PW	EN 13986	—
Strand based	**STB**		
Oriented strand board	OSB	EN 13986	EAD 140015
Strand based	**STB**		
Oriented strand board	OSB	EN 13986	EAD 140015
Wood-fibre-based	**WFB**		
Fibreboard, hard	HB	EN 13986	—
Fibreboard, medium	MB	EN 13986	—
Softboard	SB	EN 13986	—
Dry process fibreboard	MDF	EN 13986	—
Wood-particle-based	**WPB**		
Resin-bonded particleboard	RPB	EN 13986	—
Cement-bonded particleboard	CPB	EN 13986	—
Gypsum-based	**GYB**		
Gypsum plasterboard	GPB	EN 520	—
Gypsum fibreboard	GFB	EN 15283-2	—
Timber-Timber-Composite	**TTC**		
Composite wood-based beams and columns		—	EAD 130367

NOTE This table only lists products for structural use. Table 5.4 gives additional information on classes which can be used for structural purposes in accordance with this document.

[a] The column has the status of an informative NOTE and is not exhaustive. See also note 1 to entry of 3.1.3.2.

[b] Circular cross-section in static application are currently not covered by a European Technical Product Specification.

Benoemd in EC 2004

SWB - Solid Wood Based

SL
structural Lumber



ST
structural timber



FST
structural finger jointed timber

PL
parallel laminated timber



GST
glued solid timber



GL
glued laminated timber



BGL
block glued laminated timber



SWP-P
single layered solid wood panel

CL
cross layered timber



CLT
cross laminated timber



SWP-C
multi-layered solid wood panel

VB - Veneer Based

LVL
laminated veneer lumber



LVL-P
LVL with parallel veneers



LVL-C
LVL with crossband veneers

GLVL
glued laminated veneer lumber



GLVL-P
GLVL with parallel veneers

GLVL-C
GLVL with crossband veneers

PW
plywood



PW
plywood

boards

STB
strand based



OSB
oriented strand board

WFB
wood fibre based



HB
fibreboard, hard



SB
softboard



MB
fibreboard, medium



MDF
dry process fibreboard

boards

WPB
wood particle based



RPB
resin bonded particle board



CPB
cement bonded particle board

GYB
gypsum based

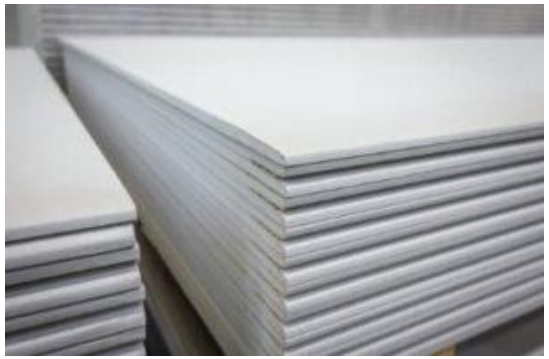

GPB
gypsum plasterboard

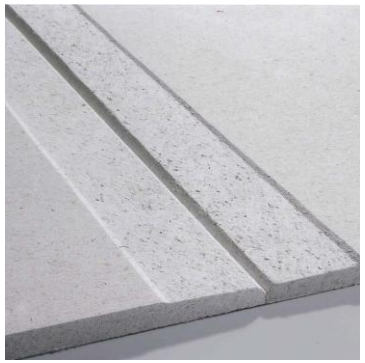

GFB
gypsum fibreboard

TTC
timber-timber composite

TTC
Composite wood-based
beams and columns

Wat er *wel* staat…

7.2.2 System level

(2) Stress redistributions and the redistribution of the internal forces due to heterogeneous material properties and/or heterogeneous material shall be considered, e.g. for hybrid structural systems consisting of timber products and other materials like timber concrete composite systems, or for structural systems consisting of timber elements with different grain orientation like CLT.



8.1.11.2 Additional requirements for cross laminated timber (CLT)

(1) For CLT subject to shear stresses due to out of plane loading, the strength of each individual critical layer shall be verified.

(2) Depending on the orientation of the respective layer, the shear strength shall be verified using the design longitudinal shear strength $f_{v,d}$ or the design rolling shear strength $f_{r,d}$ according to Formula (8.27).

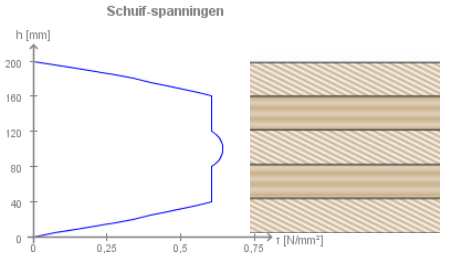

Out of plane loading	$f_{v,k}$	N/mm²	3,5
Rolling shear	$f_{r,k}$	N/mm²	0,7

Heterogeen materiaal gedrag (kruislagen) moet in rekening worden gebracht

Wat er *niet* staat…

Hóe heterogeen materiaal gedrag (kruislagen) in rekening gebracht wordt
Hiervoor ben je (nog steeds) aangewezen op de handboeken

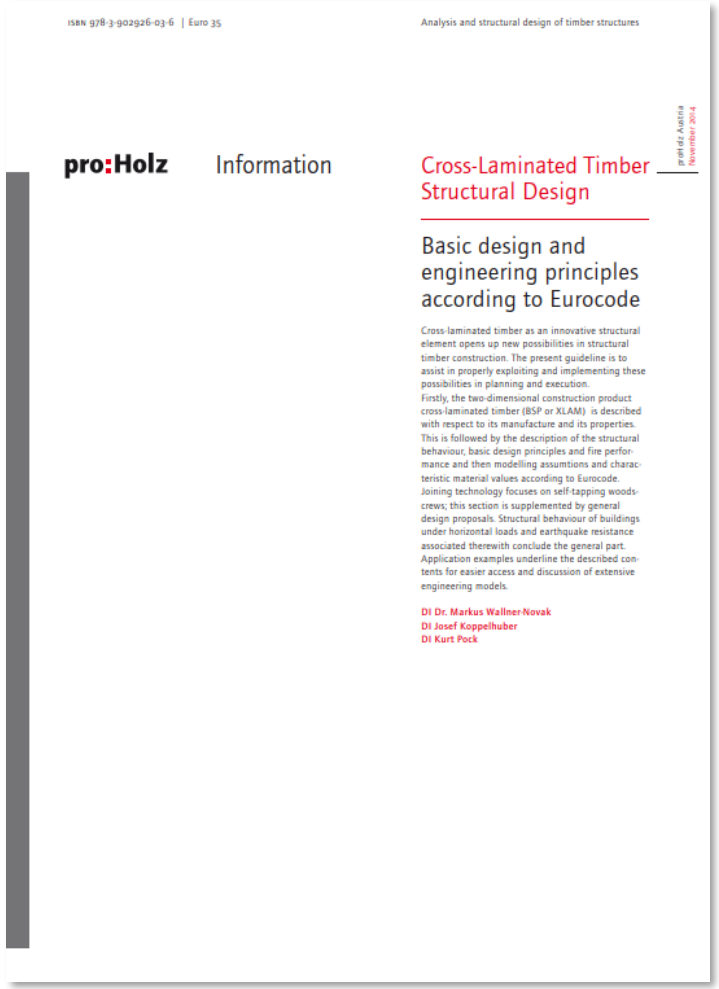

The Gamma method according to Eurocode 5

$$\gamma_1 = \frac{1}{\left(1+\frac{\pi^2 \cdot E_1 \cdot A_1}{\ell_{ref}^2} \cdot \frac{d_{1,2}}{b \cdot G_{R,12}}\right)} \quad \left[\frac{1}{m}\right]$$

$$\gamma_2 = 1{,}0 \quad \left[\frac{1}{m}\right]$$

$$\gamma_3 = \frac{1}{\left(1+\frac{\pi^2 \cdot E_3 \cdot A_3}{\ell_{ref}^2} \cdot \frac{d_{2,3}}{b \cdot G_{R,23}}\right)} \quad \left[\frac{1}{m}\right]$$

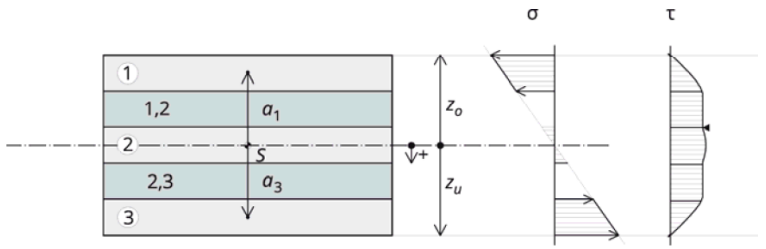

Figure 4-1: Symmetrical cross-section: designation of layers and dimensions

Wat er *wel* staat: krimp (H5)

Table 5.8 — Free shrinkage and swelling values for wood-based products (CLT, SWP-C, LVL, GLVL, PW, OSB, RPB, HB, MB, CPB)

Material	Shrinkage/swelling value, in %, for an average difference of material moisture content of 1 %	
	Perpendicular to plane of panel	In-plane of panel
Cross laminated timber (CLT) and multi-layered solid wood panel (SWP-C)	0,24	0,02 – 0,04 [a]
Laminated veneer lumber with parallel veneers (LVL-P), glued laminated veneer lumber with parallel veneers (GLVL-P)		
- parallel to grain	0,32; (0,45 [b])	0,01
- perpendicular to grain (parallel to faces)		0,32; (0,40 [b])
Laminated veneer lumber with crossband veneers (LVL-C), glued laminated veneer lumber with crossband veneers (GLVL-C)		
- parallel to grain of outer veneers	0,32; (0,45 [b])	0,01
- perpendicular to grain of outer veneers (parallel to faces)		0,03
Plywood (PW)	0,32	0,02
Oriented strand board (OSB),		
- types OSB/2 and OSB/3	0,70	0,03
- type OSB/4	0,50	0,015

[a] Swelling and shrinkage values in-plane depend on the layup. For typical layups, the lower value refers to the *x*-direction and the higher to the *y*-direction.

[b] Laminated veneer lumber (LVL) or Glued laminated veneer lumber (GLVL) from European beech wood.

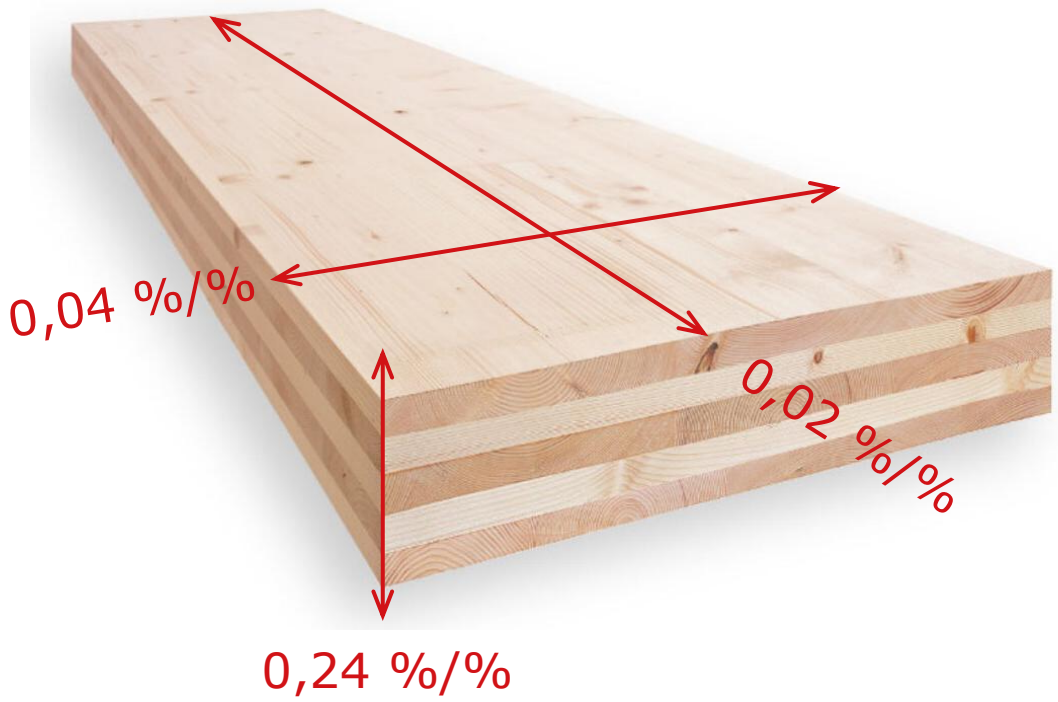

Wat er *wel* staat: schijfwerking (H12)

12.6 Diaphragms built out of CLT, LVL and GLVL

12.6.1 Wall diaphragms

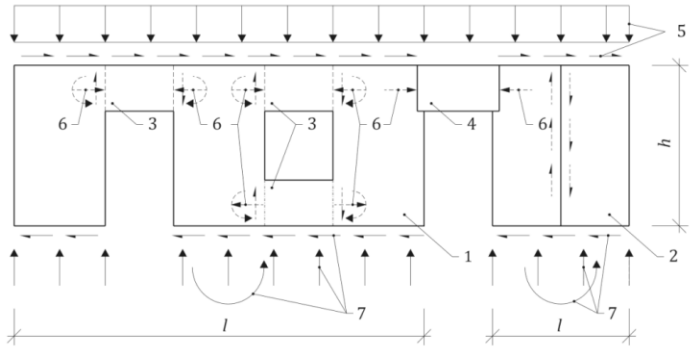

12.6.2 Floor and roof members

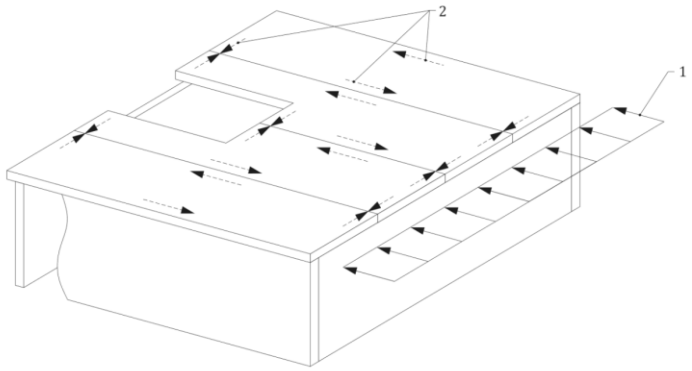

Key

1 horizontal actions

2 internal forces to be transmitted

Figure 12.16 — Force distribution in a floor diaphragm

Beknopt hoofdstuk over schijfwerking van CLT en LVL panelen

Hierin staat bijvoorbeeld dat:

- Weerstand en vervorming van individuele panelen moet worden beschouwd
- Verbindingen tussen panelen beschouwd op sterkte en vervorming
- Verbindingen voor bijv. uplift beschouwd moeten worden
- Verbindingen tussen panelen ontworpen mogen worden op constante schuifkracht

Wat er *wel* staat: stijfheid van wanden (Bijlage H)

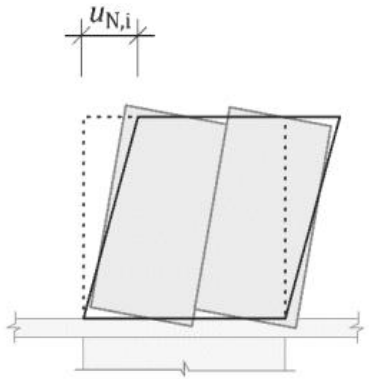

verschuiving van paneel-paneel verbinding

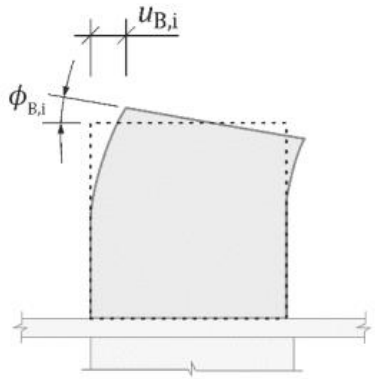

Vervorming en hoekverdraaiing door buigvervorming

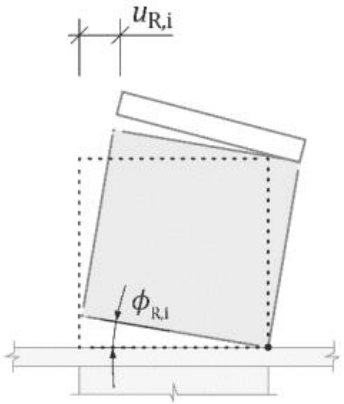

Hoekverdraaiing door trekverankering

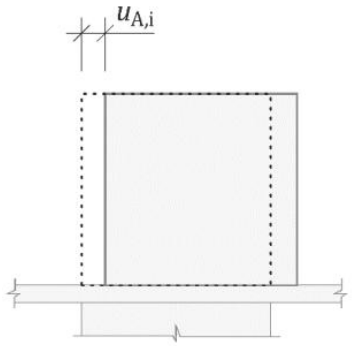

Afschuifvervorming schuifverbinding

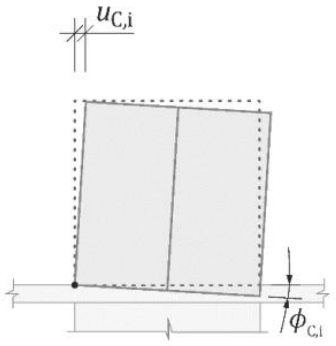

Hoekverdraaiing door druk loodrecht vervorming

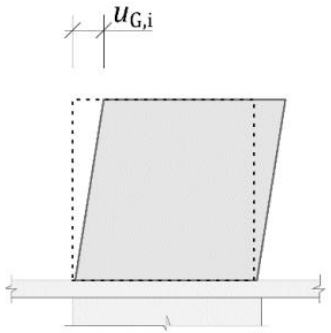

Dwarskracht vervorming paneel

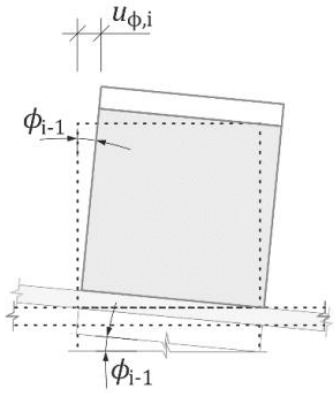

Vervorming uit hoekverdraaiing ondergelegen wand

Wat er *wel* staat: specials (bijlage B)

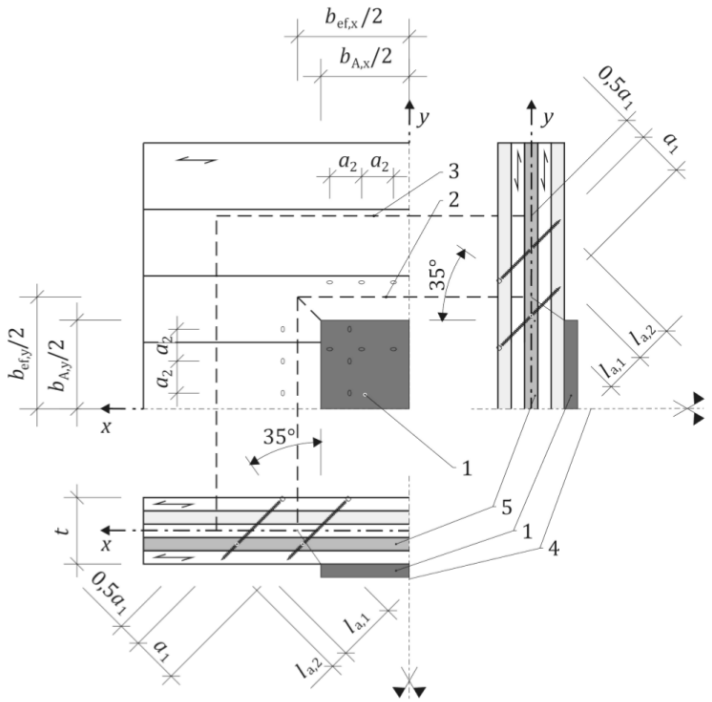

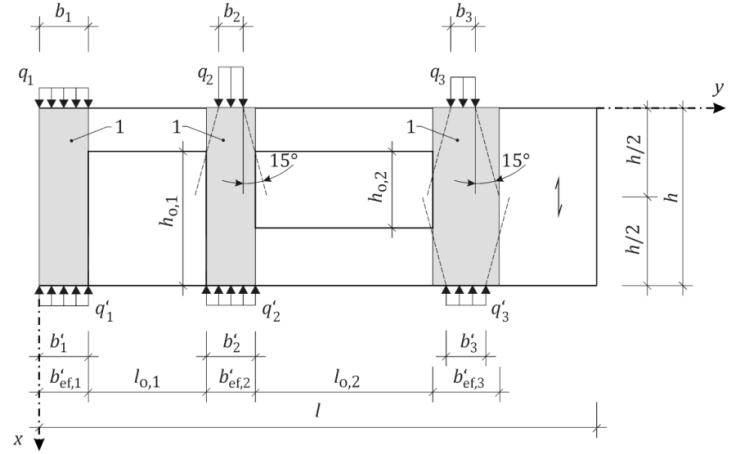

a) One-sided concentrated load at the end of a wall

b) One-sided concentrated load between openings

c) One-sided concentrated loads at an opening

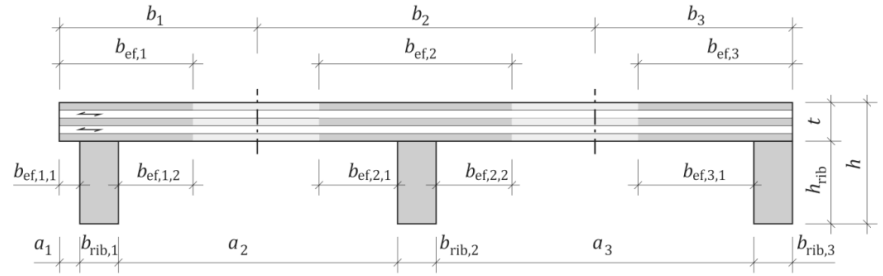

Figure C.6 — Geometry of a ribbed plate build up from CLT plates and bonded-on or mechanically jointed ribs

Wat er *wel* staat: inbranding wanneer lijm niet hittebestendig is (1995-1-2)

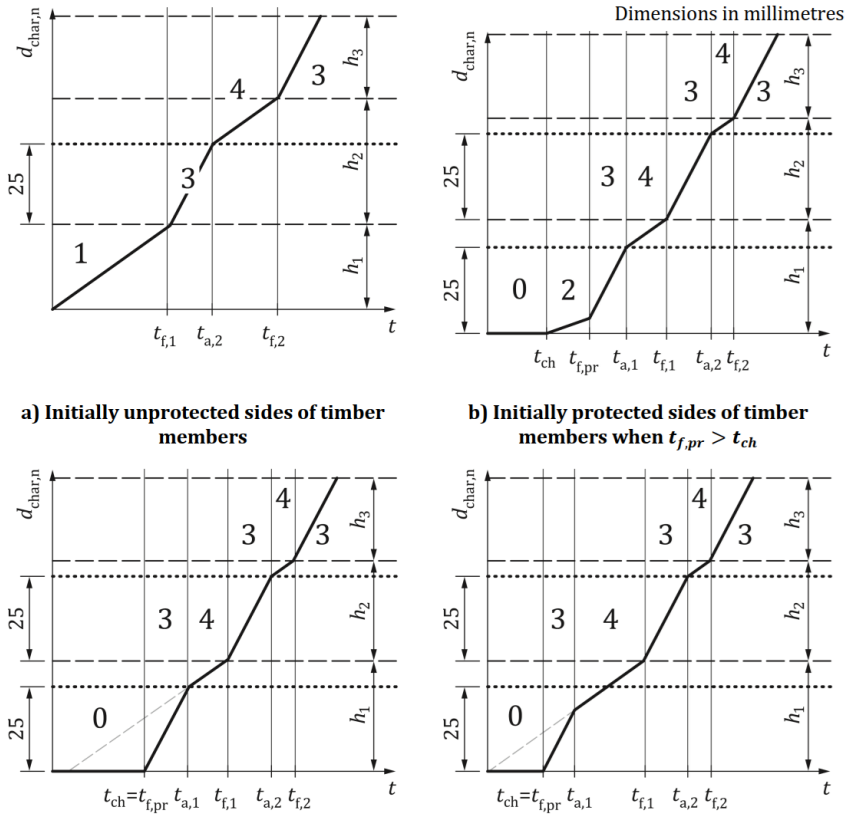

a) Initially unprotected sides of timber members

b) Initially protected sides of timber members when $t_{f,pr} > t_{ch}$

c) Initially protected sides of timber members when $t_{f,pr} = t_{ch}$

d) Initially protected sides of timber members when $t_{f,pr} = t_{ch}$ and the charring depth at t_a is less than 25 mm

Key

0	encapsulated phase (Phase 0)
1	normal charring phase (Phase 1)
2	protected charring phase (Phase 2)
3	post-protected charring phase (Phase 3)
4	consolidated charring phase (Phase 4)

$d_{char,n}$	notional charring depth, in mm
h_1, h_2, h_3	thickness of layers $i = 1$, $i = 2$ and $i = 3$, in mm
t	time
$t_{f,i}$	failure time of layer i
$t_{a,i}$	consolidation time of layer i.

Table 6.1 — Start time of charring t_{ch} and failure time of the fire protection systems $t_{f,pr}$ on vertical and horizontal linear timber members, vertical timber frame assemblies, vertical plane timber members and horizontal timber frame assemblies or plane timber members exposed to fire from above

Panels	Thickness of the fire protection system h_p [mm] [a]		Layers backed by insulation [b]		Layers backed by panel [c]	
	layer 1 h_1	layer 2 h_2	Start of charring t_{ch} [min]	Failure time $t_{f,pr}$ [min]	Start of charring t_{ch} [min]	Failure time $t_{f,pr}$ [min]
Gypsum plasterboard Type A	12,5	-	17	20	22	22
	15	-	22	25	28	28
	18	-	29	32	35	35
	12,5	12,5	28	41	39	45
	15	15	36	50	49	55
	18	18	47	61	60	67
Gypsum plasterboard Type F	12,5	-	17	32	24	35
	15	-	22	44	30	48
	18	-	29	58	37	63
	12,5	12,5	39	60	49	66
	15	15	50	82	60	90
	18	18	63	108	75	119
Gypsum plasterboard Type F + Type A (Type F is layer 1)	12,5	12,5	39	60	49	66
	15	12,5	45	71	55	78
Gypsum fibreboard	12,5	-	17	26	24	29
	15	-	22	36	30	39
	18	-	29	47	37	52
	12,5	12,5	39	50	49	55
	15	15	50	69	60	76
	18	18	63	91	75	100
Particleboard	18	-	19	19	27	27
OSB	18	-	16	16	21	21
Softwood plywood	18	-	12	12	16	16
Solid wood panels	18	-	17	17	26	26
LVL	27	-	29	29	41	41

[a] Layer 1 is at the fire exposed side.

[b] When the layers are backed by a void cavity with a thickness of 40 mm or more, the values for layers backed by insulation should be used.

[c] When the layers are backed by a vertically or horizontally oriented linear member, the values for layers backed by a panel should be used.

Sparingen in balken



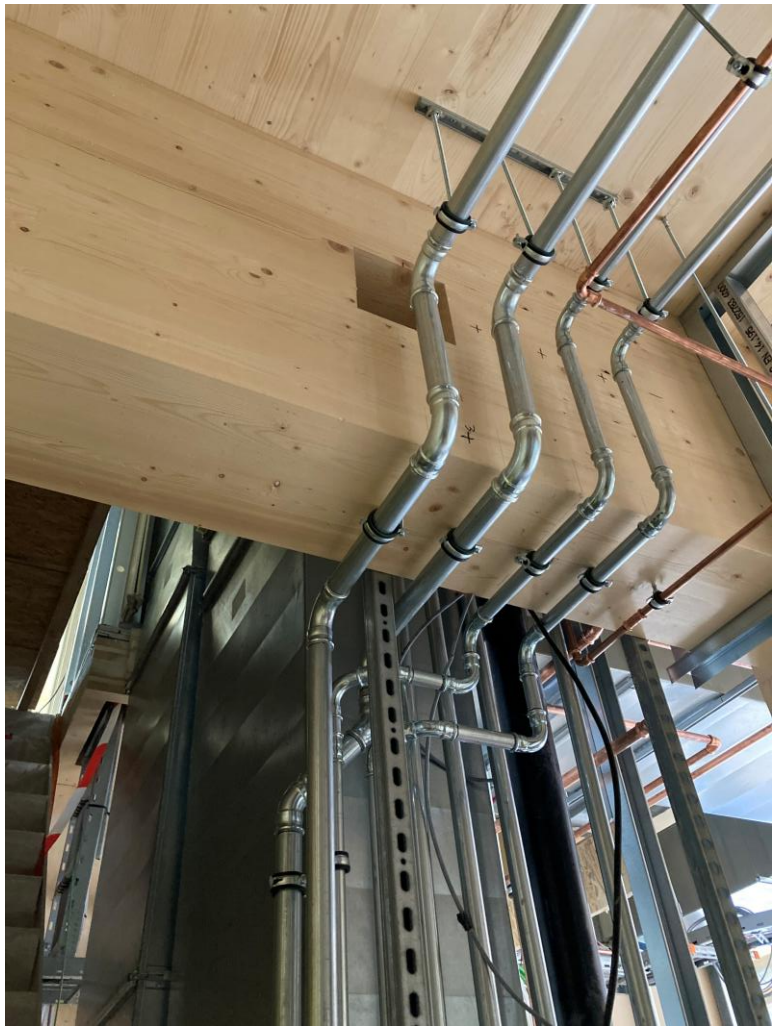

Wat er *wel* staat: detailleringsregels

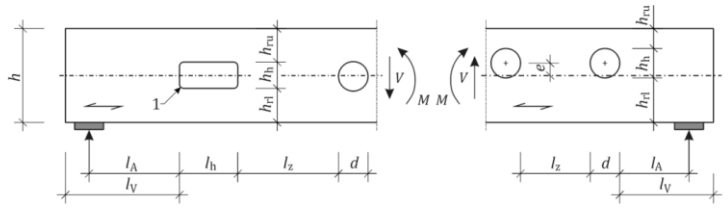

Key
1 rounded corner: corner radius $r \geq 20$ mm, if $h_h \leq 200$ mm
corner radius $r \geq 40$ mm, if $h_h > 200$ mm

Figure 8.16 — Circular and rectangular holes in beams

Table 8.3 — Minimum distances and maximum dimensions of unreinforced and reinforced holes in beams with rectangular cross-section

	Minimum distances [a]				Maximum dimensions [a]		
	End	Spacing	Support	Edges	Rectangular holes		Circular holes
Unreinforced	$l_v \geq 1{,}5h$	Individual hole: $l_z \geq 1{,}5\,h$, at least 300 mm Group of circular holes: $l_z \geq d$ [c]	$l_A \geq h/2$	$h_{ru} \geq 0{,}15\,h$ [d] at least one lamination [e] $h_{rl} \geq 0{,}2\,h$ [d] at least 1,5 laminations [e]	$l_h/h_h \leq 2{,}5$ and $l_h \leq 0{,}5h$	$h_h \leq 0{,}2h$ [f]	For $e \leq \pm 0{,}1h$: $d \leq 0{,}3h$ For $e > \pm 0{,}1h$: $d \leq 0{,}2h$
Reinforced	$l_v \geq h$ [b]	Individual hole: $l_z \geq 1{,}0h$, at least 300 mm Group of circular holes: $l_z \geq d$ [c]	$l_A \geq h/2$	$h_{ru} \geq 0{,}15\,h$ [d] at least one lamination [e] $h_{rl} \geq 0{,}2\,h$ [d] at least 1,5 laminations [e]	$l_h/h_h \leq 2{,}5$ and $l_h \leq h$	$h_h \leq 0{,}3\,h$ [f,g] $h_h \leq 0{,}4\,h$ [f,h]	$d \leq 0{,}3\,h$ [g] $d \leq 0{,}4\,h$ [h]

[a] For geometry parameters (e.g. l_A, l_v, l_z, h_{ru}, h_{rl}, h_h, e) see Figure 8.16.

[b] In applications with permanently dry or frequently changing climate, l_v should be increased ($l_v \geq 1{,}5h$).

[c] For groups of circular holes, a reduction factor applies, see 8.3.6.1(18).
The different distance limits cover the different effects of tension and compressive stresses from bending.

[d] The effect of circular arranged eccentrically should be taken into account , see 8.3.6.1(16). The values in this table assume that the upper part of the member is in compression.

[e] For LVL-P: $h_{ru} \geq 40$ mm, $h_{rl} \geq 60$ mm.

[f] The limits do not apply to nominal diameters of rectangular holes, d_h, according to 8.3.6.1(12).

[g] For holes with internal dowel-type reinforcement.

[h] For holes with external plane reinforcement, e.g. panels, laminations, LVL-C and PMP and for holes in LVL-C and GLVL-C in edgewise bending.

1. Er moet worden voldaan aan geometrische uitgangspunten (Table 8.3)

   Let op:
   - afhankelijk van versterkt/onversterkt
   - rechthoekige sparingen alleen in hart ligger
   - permanent droog: l_v>1,5h

2. Spanningen rondom sparingen moeten ook getoetst worden

Wat er *wel* staat: toets relevante spanningen

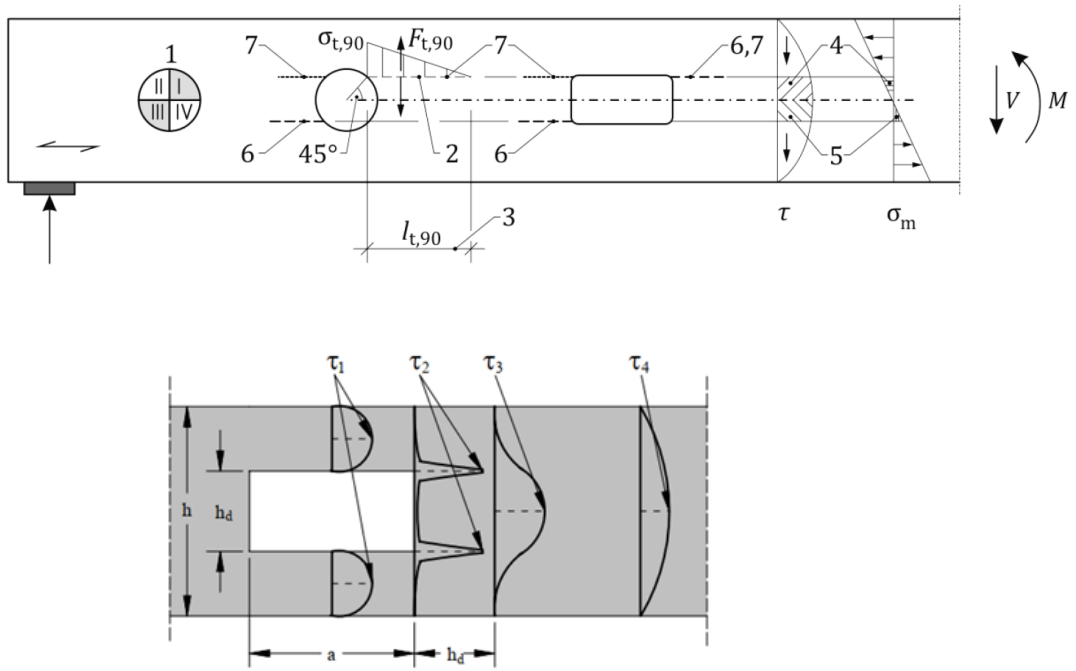

Fig. 4: Distribution of the shear stresses in a beam with hole

Uit:
2004 Blass en Bejtka – Reinforcement perpendicular to the grain using self-tapping screws

(9) For beams with holes reinforced with internal dowel-type reinforcement, 8.3.6.1(15) should be satisfied. Where Formula (8.28) with τ_{max} from Formulae (8.96) and (8.97) is not satisfied, internal reinforcement positioned perpendicular to grain, see Figure 8.19 a) and b), should not be used. For areas subjected to high shear stresses, plane reinforcement, see e.g. Figure 8.19 c) and d), may be considered in that design.

1. Er moet worden voldaan aan geometrische uitgangspunten (Table 8.3)

   Let op:
   - afhankelijk van versterkt/onversterkt
   - rechthoekige sparingen alleen in hart ligger
   - permanent droog: l_v>1,5h

2. Spanningen rondom sparingen moeten ook getoetst worden

   Controles:
   - trek loodrecht, voldoet niet -> versterken
   - buig- en schuifspanning boven/onder gat
   - verhoogde schuifspanning hoeken
     voldoet niet ->
     plaatversterking ?
     + aantonen met berekening

Wat er *wel* staat: versterkingsmaatregelen

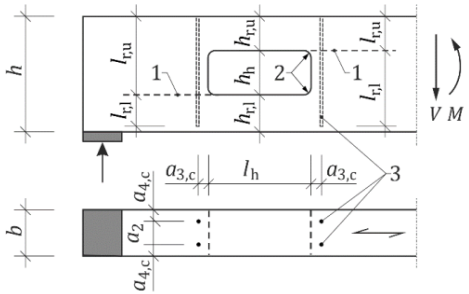

a) Rectangular hole with internal dowel-type reinforcement

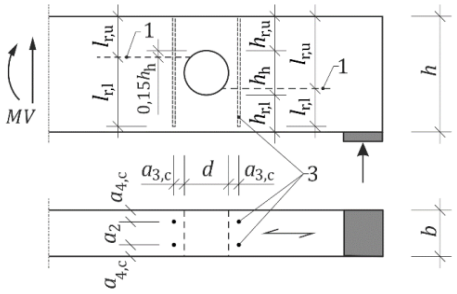

b) Circular hole with internal dowel-type reinforcement

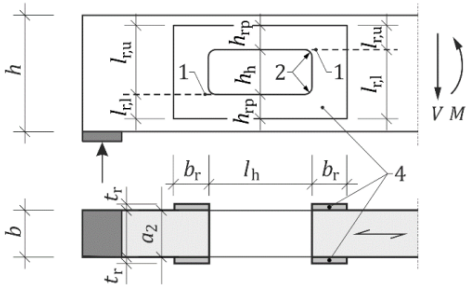

c) Rectangular hole with external plane reinforcement

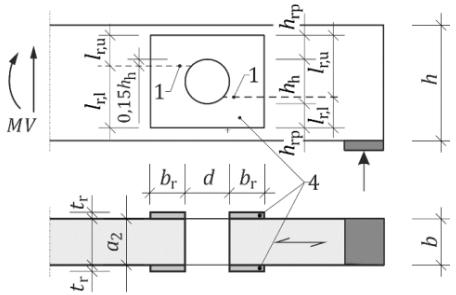

d) Circular hole with external plane reinforcement

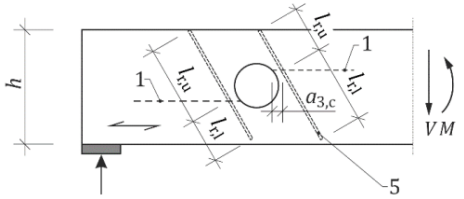

e) Circular hole with inclined internal dowel-type reinforcement

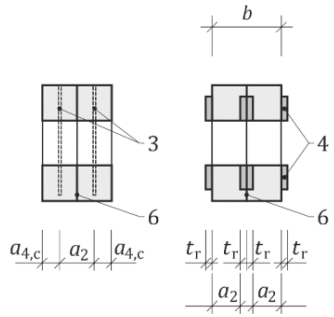

f) Cross-section of block-glued glulam member with internal and external reinforcement

Versterkingsprincipes

- Schroef
- Ingelijmd draadeind
- Plaat

Blokverlijmde liggers:
beide liggerdelen afzonderlijk versterken

Wat er *niet* staat: brand

World Conference on Timber Engineering Oslo 2023

FIRE PERFORMANCE OF PENETRATIONS IN GLULAM BEAMS: A PRELIMINARY STUDY

Laura Hasburgh[1], Keith Bourne[2], David Barber[3]

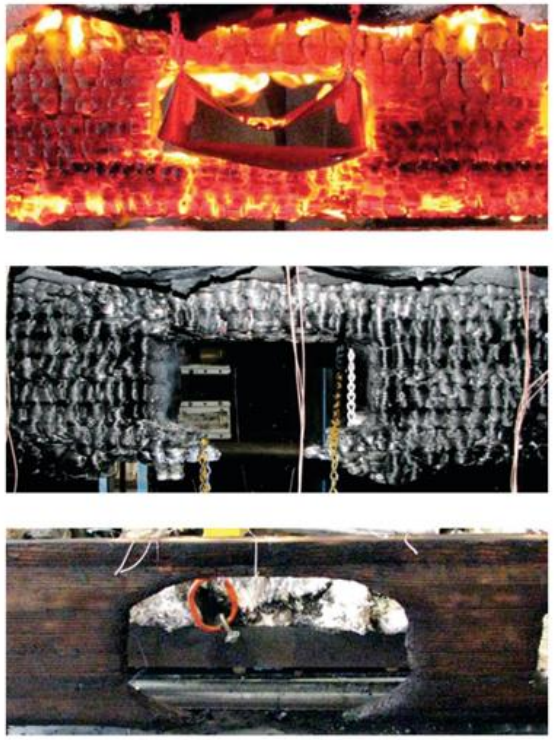

Figure 6: *Image of duct penetration immediately after removal from the furnace (top), once extinguished/cooled (middle), and with the char layer scrapped off (bottom).*

4 CONCLUSIONS

The perimeter of horizontal glulam beam penetrations will increase during a fire, further reducing the effective cross-section of the member. These preliminary results show the char rate at and around penetrations with building services components installed are near the standard nominal char rate of 0.635 mm/min for glulam beams. Therefore, when designing a structural member, in addition to reducing the overall cross section, an effective penetration size that includes an increase for charring should be considered. The results also indicate that if a horizontal penetration is made for a building service component that is later abandoned, the penetration should be filled with a non-combustible material to avoid rapid increase of the penetration during a fire.

Table 3: *Average linear char rates in mm/min for each penetration type.*

Penetration Type	Insert or empty	Char rate at 60 minutes (mm/min)	
		Side	Top[a]
large rectangular	insert	0.65	-
large rectangular	empty	0.92	0.92
large round	insert	0.68	-
large round	empty	0.74	0.47
medium round	insert	0.58	-
medium round	empty	0.99	0.54
small rectangular	insert	0.66	0.48
small rectangular	empty	0.67	0.62
small round	insert	0.51	-
small round	empty	0.69	-

[a] For five tests, the thermocouples above the penetration did not reach a temperature of 300°C at 60 minutes. As such, no data is available.

Ook brandsituatie toetsen

geen regels in prEN

Paper USDA Forest Products Laboratory:

- Inbranding met kanaal ≈ standaard inbranding
- Inbranding zonder kanaal: sneller!

Hoera, meer regels!

Voor ontwerpende constructeurs:

er kan niet per sé meer, maar er is wel meer duidelijkheid en minder zoekwerk

Voor toetsende constructeurs:

betrouwbare rekenregels op één plek; een gezamenlijke 'waarheid' om aan te refereren

Voor de markt:

level playing-field, minder risico

Vragen?